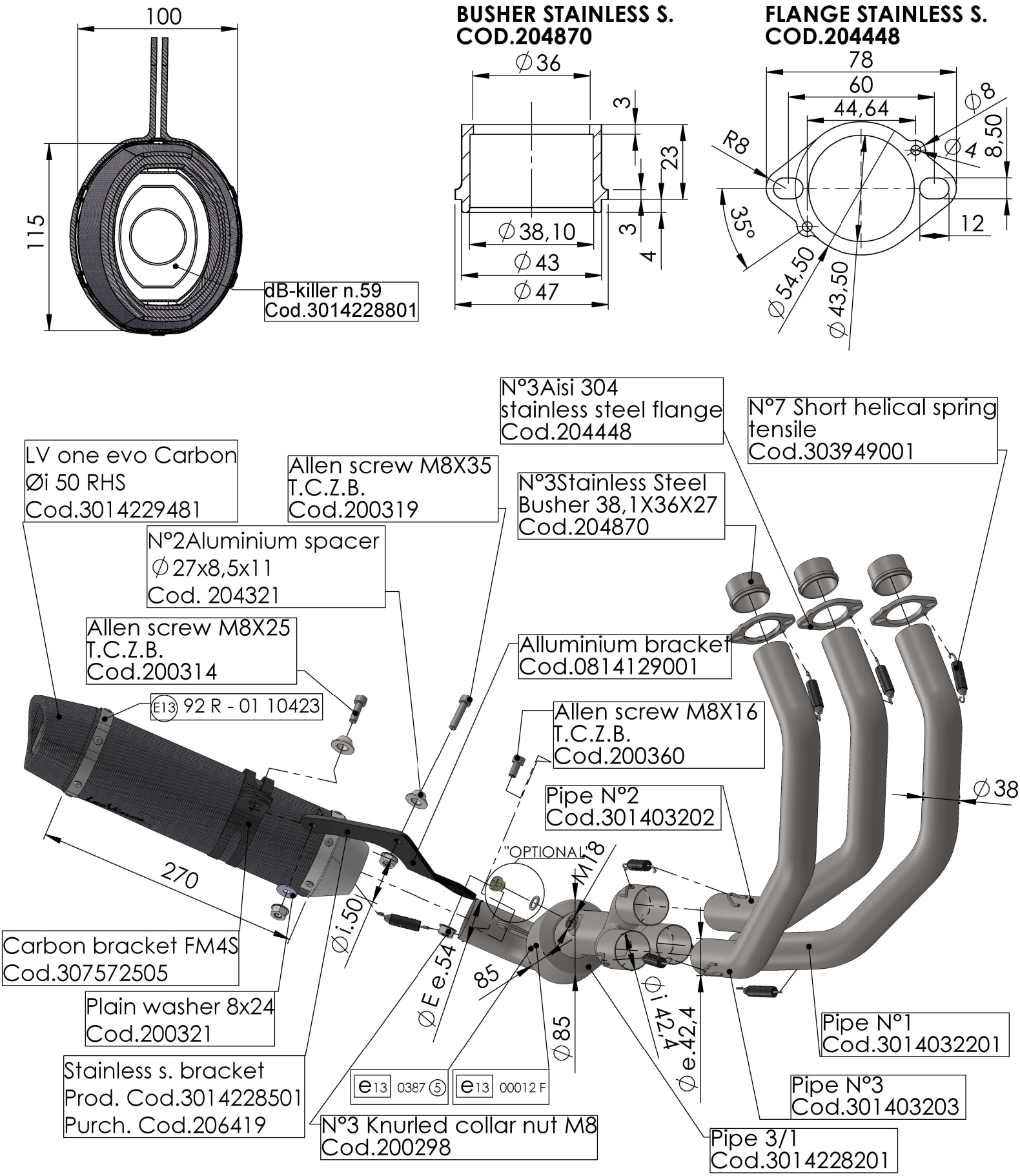

Art. 14229EK

YAMAHA MT09/SP - MT09 TRACER/GT (Fits also with centre stand) - XSR900

FULL SYSTEM 3/1 - LV ONE EVO -CARBON - APPROVED